Multideck Accessories Order Form

NAME A CUSTOMER PROJECT SUPERMARKET ORDER NO. 123194 DELIVERY DATE W/C 12/3/04

DELIVERY ADDRESS A BUILDING, A ROAD, A STREET, A TOWN, POSTCODE

Slab Edge Trim

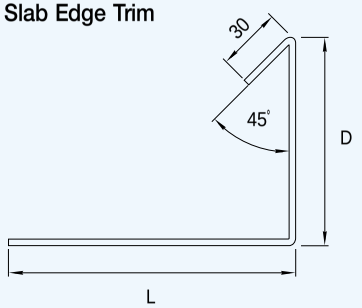

Supplied in 3.0m lengths

MARK	D	L	GAUGE	QUANTITY
ST1	150	220	12	150

Restraint Strap

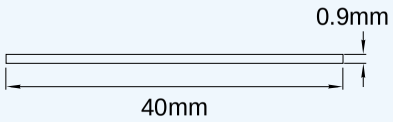

Supplied in 3.0m lengths

MARK	QUANTITY
STRAP	150

End Closure

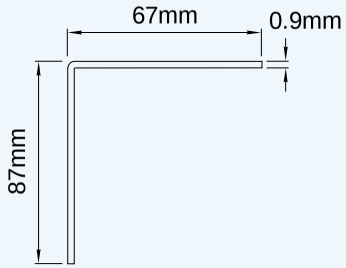

MARK	QUANTITY
CA	150

Side Closure - Profile (A)

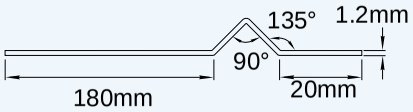

Supplied in 3.0m lengths

MARK	QUANTITY
CL	150

PHOTOCOPY THIS SHEET ON A LIGHT SETTING TO REMOVE EXAMPLE